FIRST ANGLE PRJECTION

ALL DIMENSIONS ARE IN MM

Soft copy rec on 11/6/19

DRAWING NO. 3-16053-40888

COPY RIGHT AND CONFIDENTIAL
The information on this document is the property of BHARAT HEAVY ELECTRICALS LIMITED
it must not be used directly or indirectly in any way detrimental to the interest of the company.

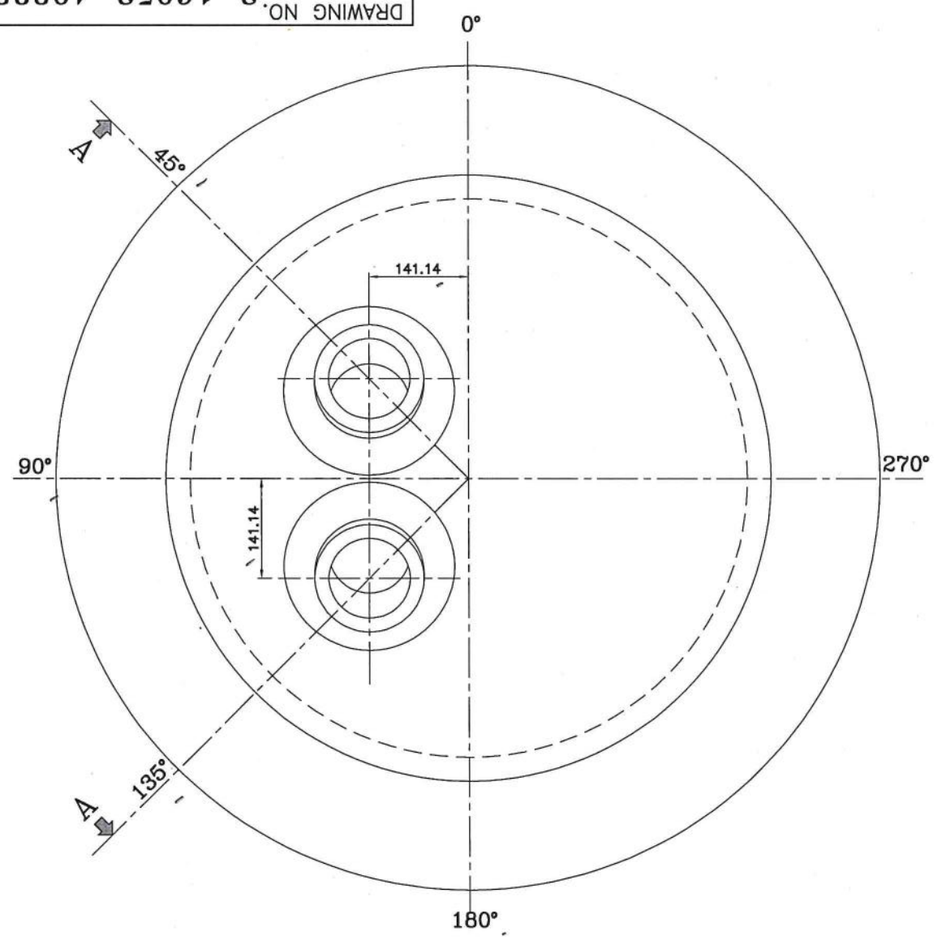

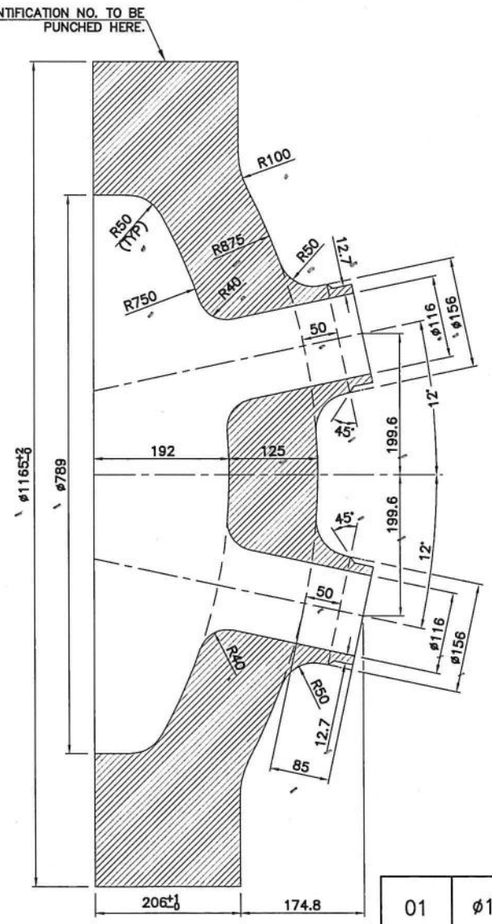

SECTION-AA

TECHNICAL REQUIREMENTS (TR):-

1. SUPPLY CONDITION : HEAT TREATED AND FINISH MACHINED ALL OVER.
2. ALL TECHNICAL AND TESTING REQUIREMENTS SHALL BE AS PER NPCIL APPROVED SPECIFICATION No.- BHEL/NPCIL/30599/CS-FORGINGS/CDE-19-3411.
3. NO REPAIRS/WELDING SHALL BE PERMITTED WITHOUT PRIOR APPROVAL OF NPCIL.
4. TEST COUPON FOR TESTING SHALL BE FORMED AS PER SPECIFICATION NO.- BHEL/NPCIL/30599/CS-FORGINGS/CDE-19-3411.
5. IDENTIFICATION TO BE STAMPED AT LOCATION SHOWN WITH FOLLOWING INFORMATION:
   a). PURCHASE FORGING NUMBER.
   b). HEAT NUMBER
   c). BHEL PO NUMBER
   d). MATERIAL DESIGNATION.
6. MATERIAL OF CONSTRUCTION : SA 350 LF2 CLASS-1.
7. TEMPORARY OIL BASED RUST PREVENTIVE TO BE APPLIED AFTER MACHINING ON ALL SURFACES.
8. ALL DIMENSIONS INDICATED ARE IN mm.
9. UNLESS OTHERWISE MENTIONED THE TOLERANCE ON LINEAR AND ANGULAR DIMENSIONS SHALL BE AS PER IS:2102.
10. THE SURFACE FINISH OF FORGINGS SHALL BE 3.2 OR BETTER.
11. ALL MACHINED SURFACES SHALL BE SUBJECTED TO MT/PT.

DO NOT SCALE THE DRAWING.
UNLESS OTHERWISE STATED:-
ALL DIMENSIONS ARE IN mm.
MACHINE ALL OVER.
SURFACE FINISH TO BE 3.2/ OR BETTER.
REMOVE ALL BURRS.
REMOVE ALL EXTERNAL SHARP CORNERS AND EDGES BY CHAMFERING TO 0.10/0.40 x 45°.
ROUND ALL INTERNAL CORNERS AND EDGES TO R 0.10/0.40.
TOLERANCES ON RADII AND CHAMFERS (IS : 2102)

RADII AND CHAMFERS	0.5-3	3-6	6-30
TOLERANCES	±0.2	±0.5	±1.0

TOLERANCE ON LINEAR DIMENSIONS (IS:2102)

DIMENSIONS	TOL.	DIMENSIONS	TOL.
UP TO 6	±0.1	315 -1000	±0.8
6 - 30	±0.2	1000-2000	±1.2
30 - 120	±0.3	2000-4000	±2.0
120 - 315	±0.5	4000-8000	±3.0

TOLERANCE ON LINEAR DIMENSIONS

SPECIFIED DIMENSIONS	TOLERANCE
XX	± 0 . 40
XX.X	± 0 . 40
XX.XX	± 0 . 25

TOLERANCE ON ANGULAR DIMENSIONS : 0°-0.5°

न्यूक्लियर पावर कॉर्पोरेशन ऑफ इंडिया लिमिटेड
Nuclear Power Corporation of India Limited

☑ अनुमोदित / APPROVED
☐ टिप्पणी के अनुसार अनुमोदित / APPROVED AS NOTED
☐ संविरचन को आगे बढ़ाएं / रोकें / PROCEED WITH/HOLD FABRICATION
☐ अंतिम ट्रांसपेरेन्सी एवं प्रतियाँ भेजें / SEND FINAL TRANSPARENCIES & PRINTS
☐ संशोधन करें एवं अनुमोदन के लिए पुनः प्रस्तुत करें REVISE & RESUBMIT FOR APPROVAL

जाँचकर्ता / CHECKED BY	समीक्षाकर्ता/ REVIEWED BY	अनुमोदन कर्ता / APPROVED BY
11/6/19	11/6/2019	11/6/19

किए जानेवाले कार्य का अनुमोदन आपूर्तिकर्ता संविदाकार को विनिर्देशनों के अनुसार आपूर्ति करने के उत्तरदायित्व से मुक्त नहीं करता है।
This approval of the work to be done does not relieve the supplier of the responsibility of supply according to specifications.

VAR00 QTY.-Nos	REMARKS	VAR. NO.	ITEM NO.	DESCRIPTION	STD	DRAWING NO.	IT.NO. / VAR.	MATL. CODE / MATL. SPCN.	CLASS	UNIT	UNIT WT. / QTY.	CS	ZONE
01	ø1165		001	PRIMARY HEAD				B.O. SA350 LF2Cl.1	A	KG	1440.0		

28 —— CARD TYPE-3 | 28 —— CARD TYPE-1 | 28 —— CARD TYPE-2

ADDITIONAL INFORMATION
DRG. LIST : 4-16503-40358
STATUS OF DRAWING
W/O. NO. : 18085/86-W-04801
DISTRIBUTION OF PRINTS
CDE - 1 HCM - 4 FWM - 4

NUCLEAR POWER CORPORATION OF INDIA LIMITED
(A GOVERNMENT OF INDIA ENTERPRISE)
PROJECT : GORAKHPUR HARIYANA ANU VIDHYUT PARIYOJANA 1&2 (700 MWe)
NPCIL PURCHASE ORDER NO. : CMM/FTP/10-33-1-1149/e-PO/30599, DATED 25.01.2019
NPCIL DRAWING NO : GHAVP-1&2/33321/2002/DD REV.00

EQUIPMENT NAME : BLEED COOLER
TAG NO : (3332-HX1)

भारत हेवी इलेक्ट्रिकल्स लिमिटेड भोपाल
BHARAT HEAVY ELECTRICALS LTD BHOPAL

	नाम/ NAME	हस्ता./SIGN	दिनांक/DATE	वे.रि. की संख्या NO. OF VAR.
बनाया DRN.	कमलेश गामीत		08/03/2019	
जाँचा CKD.	नागेन्द्र सिंह, अरूण कुमार सिंह		08/03/2019	
अनुमोदित APPD.	ए.के.माहौर		08/03/2019	

विभाग DEPT. CDE	उन.टाल. नाप की श्रेणी UNTOL. DIMS. GR. M	अनुपात SCALE	भार (कि.ग्रा.) WEIGHT (K.G.)	उसे. ड्रॉइंग का संदर्भ REF. TO ASSY. DRG.	मद क्र. ITEM NO.	मद संख्या NO. OF ITEM
कोड CODE 411	AA0203208	–	1440	3-16503-40872	001	–

शीर्षक/ TITLE
PRIMARY HEAD FORGING (SEMI-FINISHED)

ड्रॉइंग क्र./DRAWING NO. 3-16503-40888 — पुन./ REV. 04
पृष्ठ क्र./SHT. NO. 01 — पृष्ठों की संख्या/NO. OF SHT. 01

REV.	DATE		
04	07/06/19	ALTERED कमलेश गामीत	
		CHECKED नागेन्द्र सिंह	
		APPROVED ए.के.माहौर	
ZONE	DRAWING REVISED BASED ON NPCIL COMMENTS DTD. 03/06/2019.		

REV.	DATE		
03	22/05/19	ALTERED कमलेश गामीत	
		CHECKED नागेन्द्र सिंह	
		APPROVED ए.के.माहौर	
ZONE	DRAWING REVISED BASED ON NPCIL COMMENTS DTD. 20/05/2019. PROFILE DIMENSIONS INCORPORATED TO PROCURE FORGING IN FINISH CONDITION.		

REV.	DATE		
02	06/05/19	ALTERED कमलेश गामीत	
		CHECKED नागेन्द्र सिंह	
		APPROVED ए.के.माहौर	
ZONE	DRAWING REVISED BASED ON NPCIL COMMENTS DTD. 15/04/2019.		

REF. DRG. NO. | SIGN. & DATE | INVENTORY NO.

FORMAT SIZE A3